330400 and 330425 Accelerometer Acceleration Transducers

Datasheet

Bently Nevada Machinery Condition Monitoring

141638 Rev. AA

Description

These accelerometers are intended for critical machinery applications where casing acceleration measurements are required, such as gear mesh monitoring. The 330400 is designed to address the requirements of American Petroleum Institute Standard 670 for accelerometers. It provides an amplitude range of 50 g peak and a sensitivity of 100 mV/g. The 330425 is identical except it provides a larger amplitude range (75 g peak) and a sensitivity of 25 mV/g.

Most common machine malfunctions (unbalance, misalignment, etc.) occur on the rotor and originate as an increase (or at least a change) in rotor vibration. For any individual casing measurement to be effective for overall machine protection, the system must continually transmit a significant amount of rotor vibration to the machine casing, or mounting location of the transducer.

In addition, be careful to install the accelerometer transducer on the bearing housing or machine casing. Improper installation may decrease the transducer amplitude and frequency response and/or generate false signals that do not represent actual vibration. Refer to the appropriate instruction manuals and Application Notes.

Upon request, Bently Nevada provides engineering services that can identify the appropriate machine housing measurements and installation assistance if needed.

Bently Nevada
a Baker Hughes business

Specifications

Parameters are specified from +20 to +30 °C (+68 to +86 °F) and 100 Hz unless otherwise indicated.

Operation outside the specified limits may result in false readings or loss of machine monitoring.

Electrical

330400

Sensitivity	10.2 mV/m/s2 (100 mV/g) ±5%.
Acceleration range	490 m/s2 (50 g) peak overall acceleration within the 10 Hz to 15 kHz frequency span. Vibration at frequencies above 15 kHz, especially at the transducers resonance will significantly decrease this range.
Amplitude Linearity	±1% to 490 m/ s2 (50 g) peak.
Broadband Noise Floor (10 Hz to 15 kHz)	0.039 m/s2 (0.004 g) rms.

330425

Sensitivity	2.5 mV/m/s2 (25 mV/g) ±5%.
Acceleration Range	735 m/s2 (75 g) peak overall acceleration within the 10 Hz to 15 kHz frequency span. Vibration at frequencies above 15 kHz, especially at the transducer's resonance, will significantly decrease this range.
Amplitude Linearity	±1% to 735 m/s2 (75 g) peak.
Broadband Noise Floor (10 Hz to 15 kHz)	0.098 m/s2 (0.01 g) rms.

Both Units

Frequency Response	10 Hz to 15 kHz (600 cpm to 900,000 cpm) ±3dB; 30 Hz to 10 kHz (1800 cpm to 600,000 cpm) ±10%
Temperature Sensitivity	-11% to +3% typical over the operating temperature range.
Transverse Sensitivity	Less than 5% of axial.
Mounted Resonant Frequency	Greater than 30 kHz.
Amplitude of Resonant Peak	20 dB maximum.
Base Strain Sensitivity	
For serial numbers preceded by the letter "G" (including all new sensors	49 mm/s2/mstrain (0.005 g/mstrain)
For serial numbers NOT preceded by the letter "G" (shipped prior to April 2004)	980 mm/s2/mstrain (0.100 g/mstrain) without Mounting Base (API adapter); 4.9 mm/s2/mstrain (0.0005 g/mstrain) with Mounting Base (API adapter) supplied with the accelerometer. For units bearing serial numbers NOT preceded by the letter "G", Bently Nevada recommends installing with the Mounting Base to minimize base strain sensitivity.
Maximum cable length	305 metres (1000 ft) with no degradation of signal.
Power requirements	
Input Voltage	-24 ± 0.5 Vdc.
Bias Current	2 mA nominal.
Output Bias Voltage:	-8.5 ± 0.5 Vdc.
Grounding	Case isolated.

Environmental Limits

Operating and storage temperature	-55ºC to +121ºC (-67ºF to +250ºF)
Shock Survivability	49,050 m/s2 (5000 g) peak, maximum.
Relative humidity	100% condensing, non-submerged. Case is hermetically sealed.
Magnetic Field Susceptibility	<2.21 mm/s2/gauss (225 mg/gauss) [50 gauss, 50-60Hz].
IP Rating	Equivalent to an IP 68 (Dust tight and watertight). Please note that this is for the sensor only and does not apply to the cable.

Physical

Weight (no cable)	99 g (3.5 oz), typical
Diameter	23 mm (0.93 in).
Height	59 mm (2.3 in), including mounting stud.
Connector	3-pin MIL-C-5015 Receptacle 316L stainless steel
Mounting Surface	32 minch rms.
Mounting Torque	4.1 N·m (3.0 ft·lb).
Case Material	316L stainless steel
Weight (no cable)	100 g (3.5 oz), typical
Mounting Angle	Any orientation

Compliance and Certifications

Hazardous Area Approvals

For the detailed listing of country and product specific approvals, refer to the *Approvals Quick Reference Guide* (108M1756) available from Bently.com.

CSA/NRTL/C

190501 (Agency Approval Options 01 through 04)	
Intrinsically Safe	Ex ia IIC T4: Class I, Div 1, Groups A, B, C, D. Class II, Group E, F and G Class III AEx ia IIC T4: Class I, Div 1, Groups A, B, C, D; Class II, Groups E, F, G Class III Install per drawing 167536 T4 @ -40°C ≤ Ta ≤ +100°C (-40°F ≤ Ta ≤ +212°F)
Intrinsically Safe and Non-Incendive	Ex nL IIC T4 Class I, Division 2, Groups A, B, C and D AEx nA T4 Class I, Division 2, Groups A, B, C and D Install per drawing 167536 T4 @ -40°C ≤ Ta ≤ +100°C (-40°F ≤ Ta ≤ +212°F)
330400, 330425	Ex ia IIC T4 AEx ia IIC T4 Class I, Div 1 Groups A, B, C and D Class II, Groups E, F, and G Class III T4 @ -40°C ≤ Ta ≤ 100°C Install per dwg 167538
330500	Ex ia IIC T4 AEx ia IIC T4 Class I, Division 1, Groups A, B, C and D Class II, Groups E, F, G Class III Install per dwg 167537 T4 @ -40°C ≤ Ta ≤ 100°C Ex nL IIC T4 AEx nA IIC T4 Class I, Div 2, Groups A, B, C, D Install per dwg 167537 T4 @ -40°C ≤ Ta ≤ 100°C
330525	Ex ia IIC T4 AEx ia IIC T4 Class I, Division 1, Groups A, B, C and D Class II, Groups E, F, G Class III T4 @ -40°C ≤ Ta ≤ 100°C Ex nL IIC T4 AEx nA IIC T4 Class I, Div 2, Groups A, B, C, D Install per dwg 167539 T4 @ -40°C ≤ Ta ≤ 100°C

ATEX/IECEx

190501, 330400, 330425, 330500, 330525

<table>
<tr><td>190501

Entity Parameters</td><td>II 1 G
Ex ia IIC T4 Ga

II 3 D
Ex na IIC T4 Gc
Ex tc IIIC T130°C Dc
T4@ Ta = -55°C to 121°C

<table><tr><th>Zone 0/1</th><th>Zone 2</th></tr><tr><td>Ui= 30V</td><td>Ui= 30V</td></tr><tr><td>Ii= 200mA</td><td>Ii= 200mA</td></tr><tr><td>Pi= 0.75W</td><td>Pi= 1.14W</td></tr><tr><td>Ci-27.2nF</td><td></td></tr><tr><td>Li= 0</td><td></td></tr></table></td></tr>
<tr><td>330400, 330425, 330500, 330525

Entity Parameters</td><td>II 1 G
Ex ia IIC T4 Ga

II 3 D
Ex na IIC T4 Gc
Ex tc IIIC T130°C Dc
T4@ Ta = -55°C to 121°C

<table><tr><th>Zone 0/1</th><th>Zone 2</th></tr><tr><td>Ui= 28V</td><td>Ui= 28V</td></tr><tr><td>Ii= 150mA</td><td>Ii= 150mA</td></tr><tr><td>Pi= 0.84W</td><td>Pi= 1.26W</td></tr><tr><td>Ci-10.8nF</td><td></td></tr><tr><td>Li= 0</td><td></td></tr></table></td></tr>
</table>

Hazardous Area Conditions of Safe Use

ATEX/IECEx

Zone 0/1:

Equipment must be connected to equipment, which meets the abovelisted entity parameters.

The cables type A or B (in compliance with EN 60079-25) must respect the cable parameters listed with the entity parameters.

Zone 2 :

The supply electrical parameters shall not exceed the values mentioned in the tables above.

Bently Nevada
a Baker Hughes business

Ordering Information

For the detailed listing of country and product specific approvals, refer to the *Approvals Quick Reference Guide* (108M1756) available from Bently.com.

330400 Accelerometer

330425 Accelerometer

Part Number-AA-BB

A: Mounting Thread Option	
0 1	¼-28 UNF integral stud
0 2	M8 X 1 integral stud
B: Agency Approval Option	
0 0	None
0 5	Multiple approvals (CSA, ATEX, IECEx,)

Interconnect Cables

Part Number-AA

A:	**Cable Length Option in feet**
	For the cables listed below, order in increments of 1.0 ft (305 mm).

Examples:

1 5 = 15 ft (4.57 m)
2 0 = 20 ft (6.10 m)

The following are standard lengths	
Feet	**Metres (approx.)**
6	1.8
8	2.4
10	3.0
12	3.6
15	4.5
17	5.0
20	6.0
25	7.6
50	15.2
99	30.0

Non-standard/custom lengths can also be ordered at additional cost.

Cable Part Numbers	
130539	3-conductor shielded 18 AWG (1.0 mm2) cable with 3-socket plug and fluorosilicone elastomer boot at one end, terminal lugs at the other end. Minimum length of 2.0 ft (0.6 m), maximum length of 99 ft (30 m). A manual is available to assist with installation of this cable (part number 133080-01).
16925	3-conductor shielded 22 AWG (0.5 mm2) cable with 3-socket plug at one end, terminal lugs at the other end. Minimum length of 2.0 ft (0.6 m), maximum length of 99 ft (30 m).
16710	3-conductor shielded 22 AWG (0.5 mm2) armored cable with 3-socket plug at one end, terminal lugs at the other end. Minimum length of 3.0 ft (0.9 m), maximum length of 99 ft (30 m).

Accessories

127088	330400 and 330425 Accelerometer User Guide
00531080	Mating connector for 330400 and 330425 Accelerometers.

37439-01	For use with serial numbers NOT preceded with the letter “G”. Mounting Base, ¼-28 to ¼-28. Reduces base strain sensitivity.
37439-02	For use with serial numbers NOT preceded with the letter “G”. Mounting Base, M8X1 to M8X1. Reduces base strain sensitivity.
43217	Accelerometer Mounting Kit used with extension part number 108576-01 and O-ring part number 04290422 to allow room for the 330400 or 330425 accelerometer. (See separate datasheet, document 141630.)

Graphs and Figures

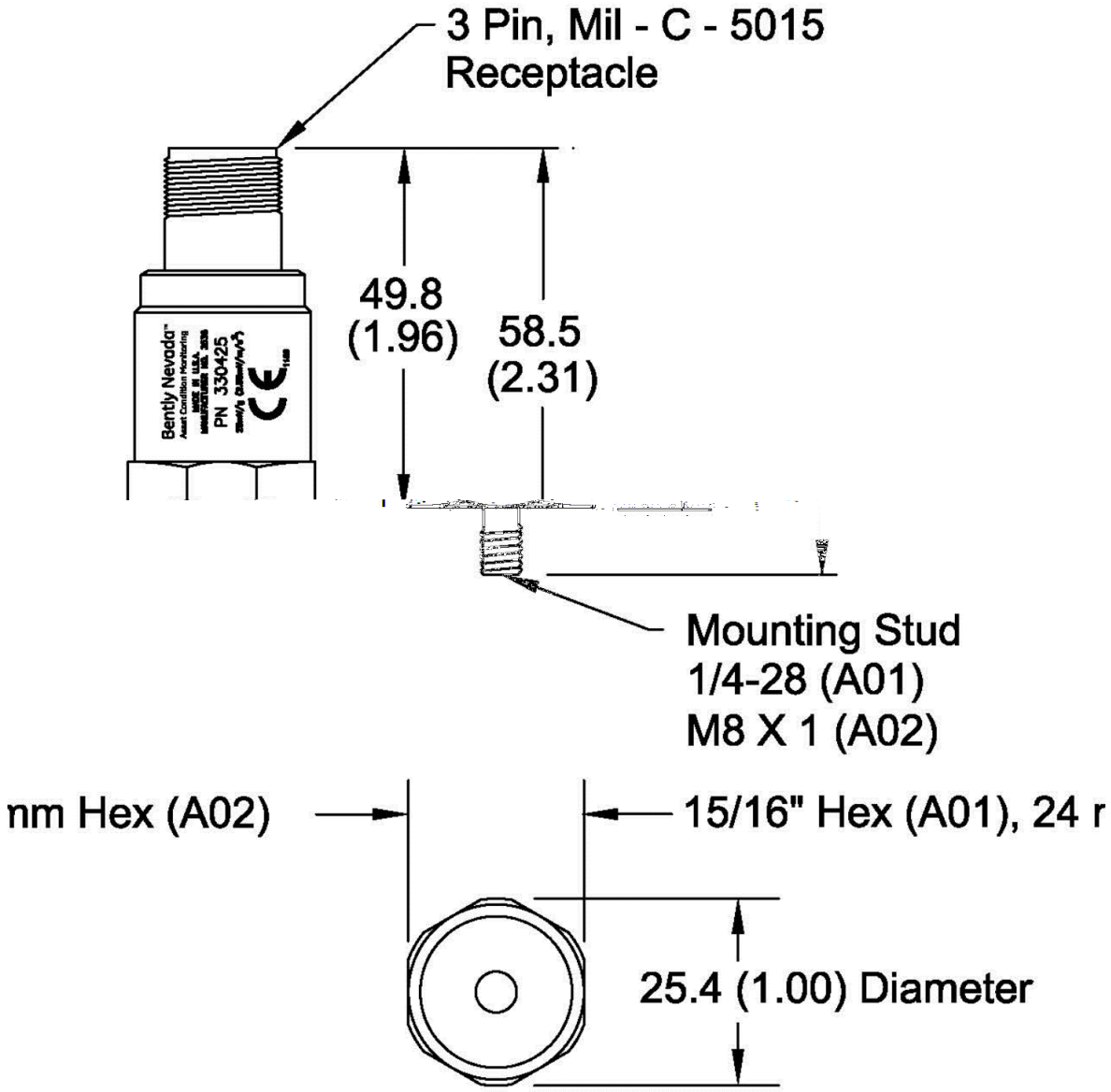

Figure 1: Acceleration Transducer Dimensional Drawing

Dimensions are in millimetres (inches)

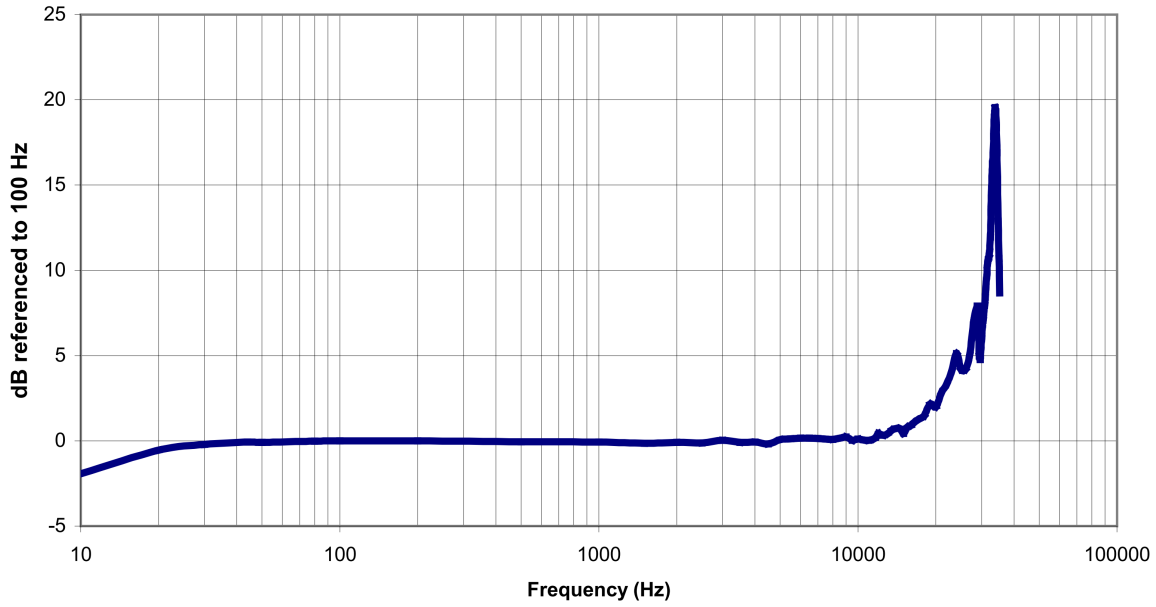

Figure 2: Typical Amplitude Response

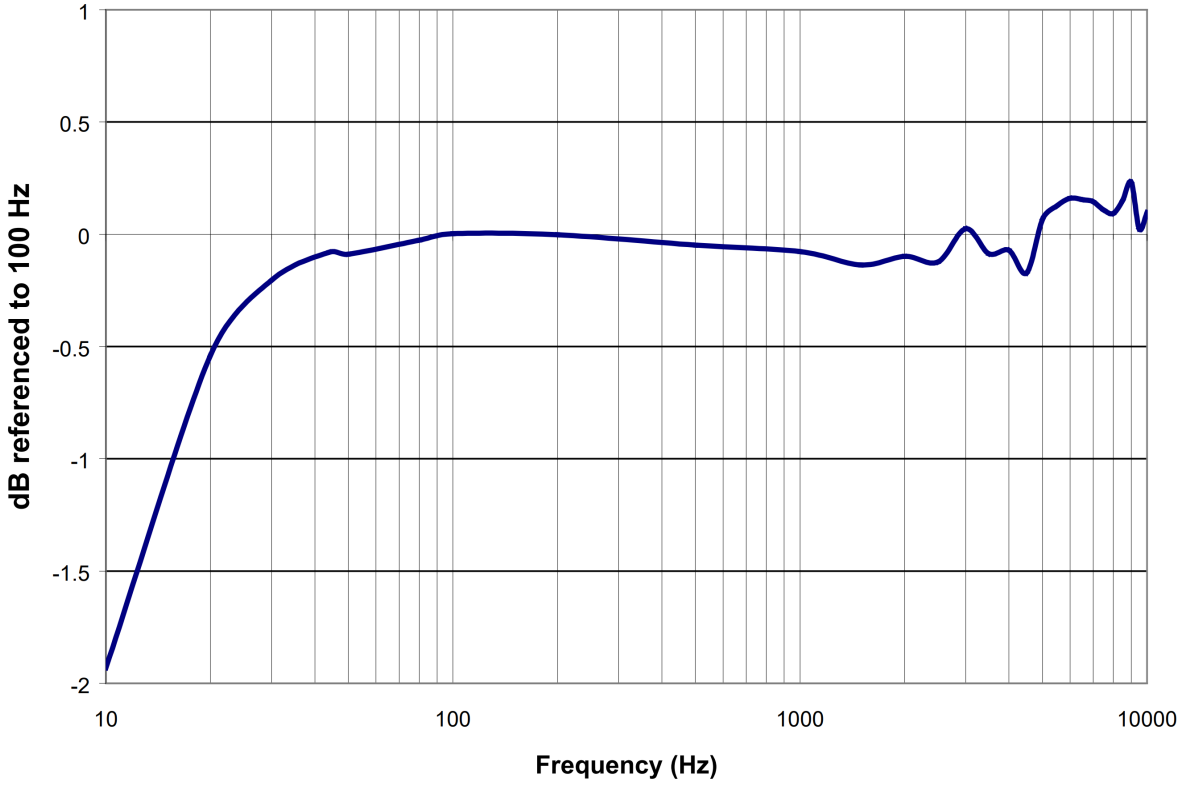

Figure 3: 10 – 10,000 Hz Typical Amplitude Response Detail

Copyright 2022 Baker Hughes Company. All rights reserved.

Bently Nevada, M2 and Orbit Logo are registered trademarks of Bently Nevada, a Baker Hughes business, in the United States and other countries. The Baker Hughes logo is a trademark of Baker Hughes Company. All other product and company names are trademarks of their respective holders. Use of the trademarks does not imply any affiliation with or endorsement by the respective holders.

Baker Hughes provides this information on an "as is" basis for general information purposes. Baker Hughes does not make any representation as to the accuracy or completeness of the information and makes no warranties of any kind, specific, implied or oral, to the fullest extent permissible by law, including those of merchantability and fitness for a particular purpose or use. Baker Hughes hereby disclaims any and all liability for any direct, indirect, consequential or special damages, claims for lost profits, or third party claims arising from the use of the information, whether a claim is asserted in contract, tort, or otherwise. Baker Hughes reserves the right to make changes in specifications and features shown herein, or discontinue the product described at any time without notice or obligation. Contact your Baker Hughes representative for the most current information.

The information contained in this document is the property of Baker Hughes and its affiliates; and is subject to change without prior notice. It is being supplied as a service to our customers and may not be altered or its content repackaged without the express written consent of Baker Hughes. This product or associated products may be covered by one or more patents. See Bently.com/legal.

1631 Bently Parkway South, Minden, Nevada USA 89423
Phone: 1.775.782.3611 (US) or Bently.com/support
Bently.com